APPLICATION:

PRODUCT NAME:

RISER PRE-RINSE 10 PC

JOB NAME:

☐ _____ SPECIAL CONFIGURATION
CHECK BASE MODEL AND OPTIONS

QUANTITY:

ITEM NO.

MODEL:

☐ 3336

OPTIONS OR MODIFICATIONS:

- ☐ SUPPLY LINES (24" OR 36") CIRCLE LENGTH
- ☐ NIPPLES
- ☐ ELBOWS
- ☐ HANDLES (CROSS OR WRIST) CIRCLE STYLE
- ☐ VANDAL RESISTANT KIT
- ☐ OTHER _____

FEATURES

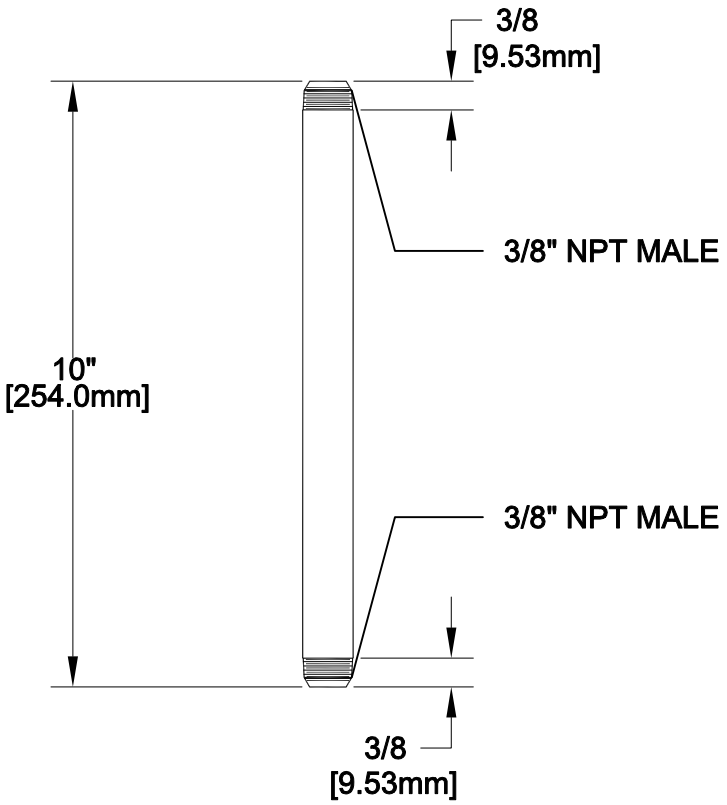

SHIPPING WEIGHT
* X.X LBS

ANSI/A112.18.1M

FISHER MANUFACTURING COMPANY
TOLL FREE: 800-421-6162 - FAX: 800-832-8238
information@fisher-mfg.com - www.fisher-mfg.com

SPEC. 3336 REV.A